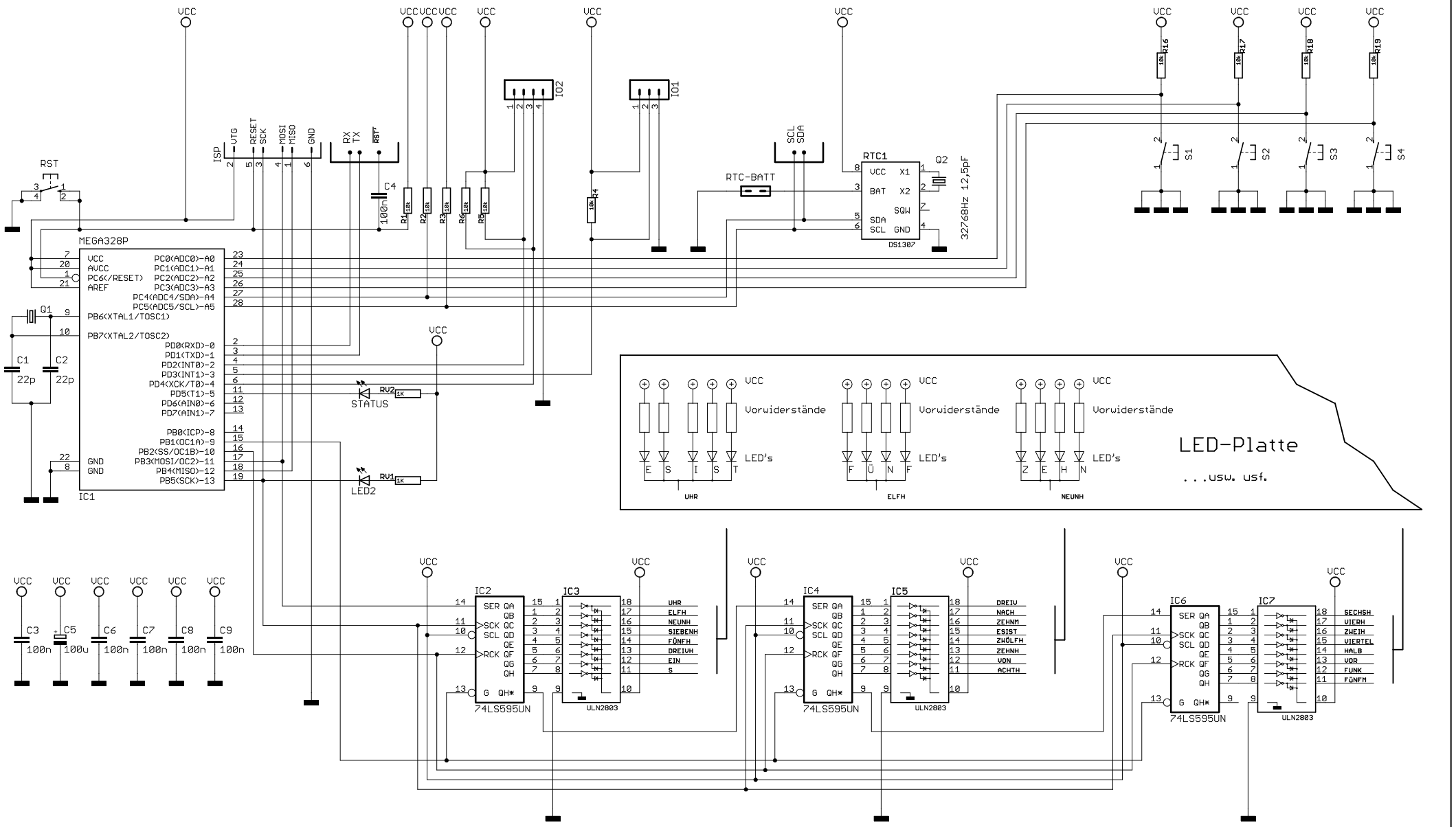

TITLE: WortUhr Controller V1.0.1c	
Document Number:	REV:
Date:	Sheet: 1/1